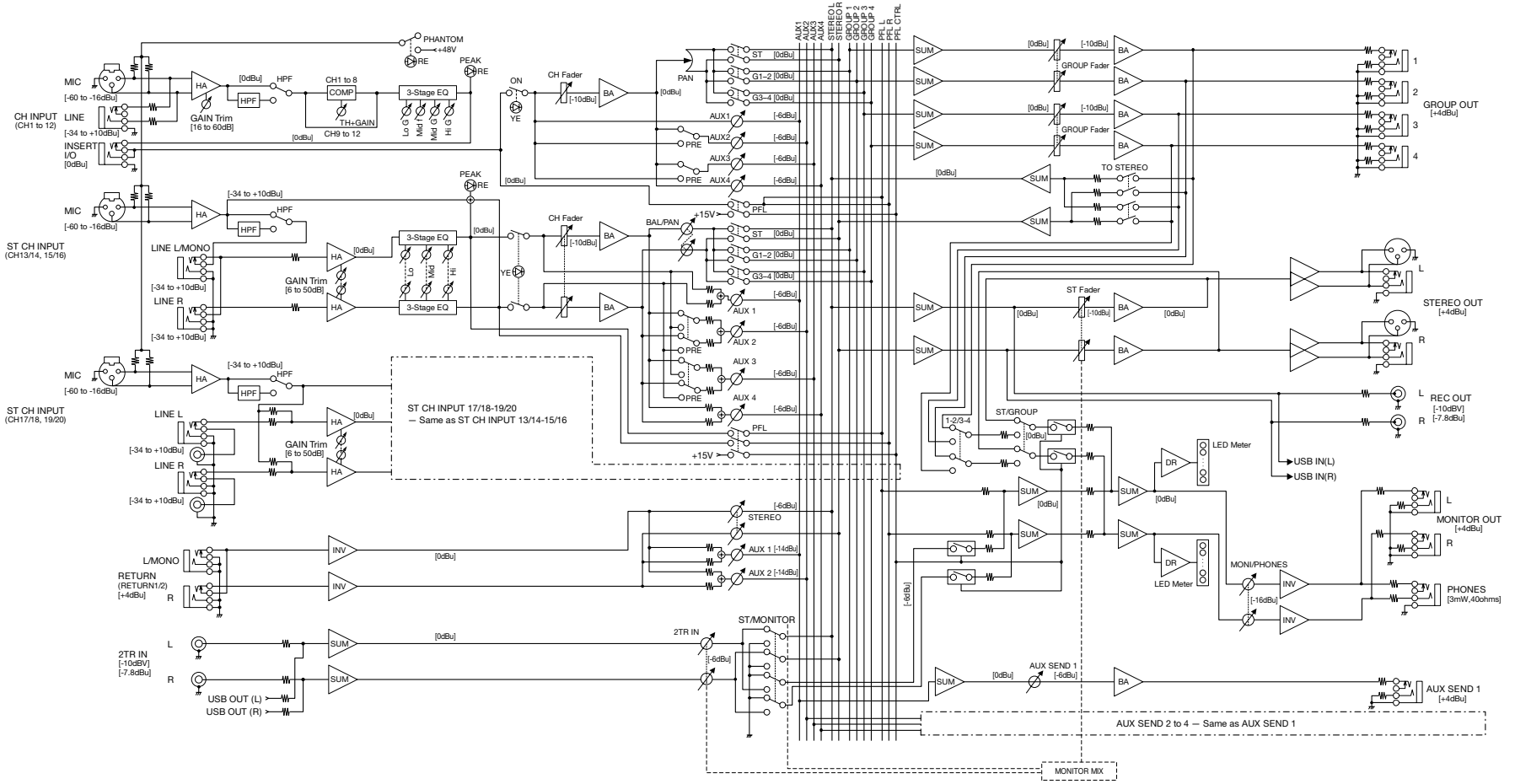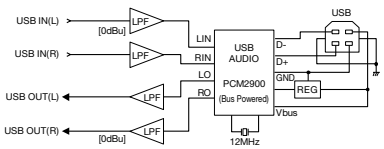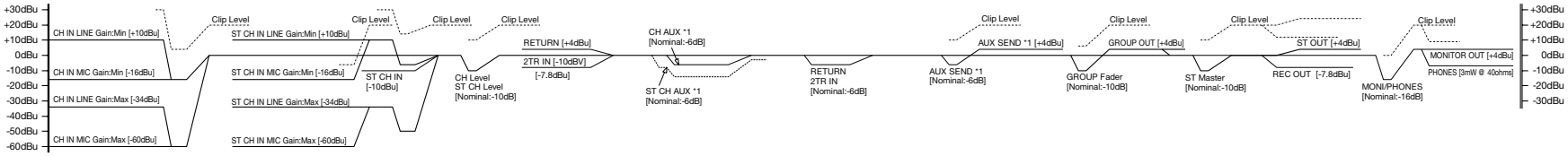■ Block Diagram and Level Diagram (MG206C-USB)